Application Note
CTAN #305

This Application Note is pertinent to the Unidrive SP, Mentor/Quantum MP GP20 and Affinity Families

Creating a Custom Motor Overtemperature Trip

The above mentioned drives have facilities on Analog Input #3 (terminal 8 of the drive) that allow a motor thermistor (temperature sensing transducer) to be monitored by the drive. There are modes that can be selected for this input to trip the drive on a motor overtemperature.

The default settings for this Analog input is set for a Thermistor that is typically installed in our Servo motors- (UniMotor). There may be cases whereby you are applying a motor that has an integral thermistor but the value of that thermistor falls outside the range of use by the drives standard default internal motor thermistor trip monitoring circuitry. This application note will outline a method to create ones' own Motor Overtemperature trip scheme with annunciation and optional early Warning.

Unidrive SP Default Thermistor Setup and Expectations

Operating in Thermistor Input Mode
Trip threshold resistance: 3.3kΩ ± 10%
Reset Resistance: 1.8kΩ ± 10%
Short circuit detection resistance: 50Ω ± 30%

Unidrive SP thermistor input resistance v Pr 7.03 reading
The following graph shows the response of the Unidrive thermistor input to a change in resistance.

Resistance (Ohms)	Pr 7.03
0	0
500	4.5
1000	9.6
1500	14.3
2000	19.2
2500	24
3000	29
3500	34
4000	39

	Tripped	Reset
Resistance (Ohms)	3400	1875
Pr 7.03	33.4	18

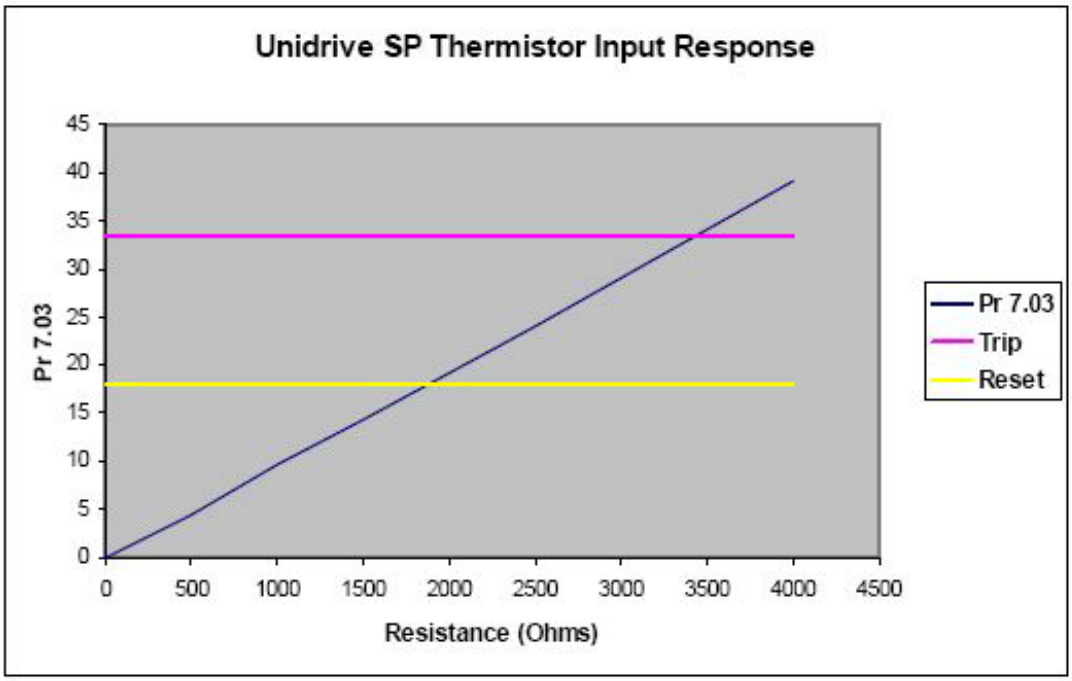

A motor thermistor can be wired between Terminal 8 and 11 or it can come into the drive via the Encoder Cable on pin 15 of the 15pin D Connector on the lower left corner of the Drive Control pod.

One could verify the ohmic resistance of the thermistor at room temperature by setting #7.15= th.diSP and observing #7.03. It will appear as a percentage of 10K ohms. A value of 59% would tend to indicate the thermistor circuit is open.

Terminal	Encoder connections				
1	A		F	Cos	
2	A\		F\	Cos\	
3	B		D	Sin	
4	B\		D\	Sin\	
5	Z			Data	
6	Z\			Data\	
7	U	Fout*	Aout*	Fout*	Aout*
8	U\	Fout*	Aout*	Fout*	Aout*
9	V	Dout*	Bout*	Dout*	Bout*
10	V\	Dout*	Bout*	Dout*	Bout*
11	W				Clk
12	W\				Clk\
13	+V			+V	
14	0V			0V	
15	Th			Th	

*Simulated encoder output only available in open-loop

T15, the motor thermistor is common to Anip 3.
This input is set to Thermistor mode as default in closed loop vector mode. Set Pr **7.15** to disable this trip

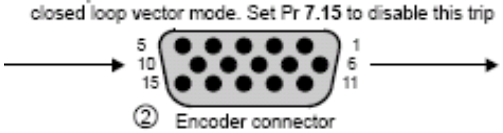

② Encoder connector
15 way D-type

Note:

This application note assumes that the non-standard Thermistor is within the range of the monitoring circuitry and exhibits a PTC characteristic. A thermistor whose center values are greater than 5K or less and 500ohms may not be suitable for this scheme.

In addition, an NTC characteristic could be accommodated but logic would need inverted.

Example 1

Another commonly used Thermistor which can be found used in motors is the KTY 84 Series. Click ----→ **KTY84** to obtain a data sheet for this device.

AMBIENT TEMPERATURE		TEMP. COEFF.	KTY84/130				KTY84/150			
(°C)	(°F)	(%/K)	RESISTANCE (Ω)			TEMP. ERROR (K)	RESISTANCE (Ω)			TEMP. ERROR (K)
			MIN.	TYP.	MAX.		MIN.	TYP.	MAX.	
−40	−40	0.84	340	359	379	±6.48	332	359	386	±8.85
−30	−22	0.83	370	391	411	±6.36	362	391	419	±8.76
−20	−4	0.82	403	424	446	±6.26	394	424	455	±8.7
−10	14	0.80	437	460	483	±6.16	428	460	492	±8.65
0	32	0.79	474	498	522	±6.07	464	498	532	±8.61
10	50	0.77	514	538	563	±5.98	503	538	574	±8.58
20	68	0.75	555	581	607	±5.89	544	581	618	±8.55
25	77	0.74	577	603	629	±5.84	565	603	641	±8.54
30	86	0.73	599	626	652	±5.79	587	626	665	±8.53
40	104	0.71	645	672	700	±5.69	632	672	713	±8.5
50	122	0.70	694	722	750	±5.59	679	722	764	±8.46
60	140	0.68	744	773	801	±5.47	729	773	817	±8.42
70	158	0.66	797	826	855	±5.34	781	826	872	±8.37
80	176	0.64	852	882	912	±5.21	835	882	929	±8.31
90	194	0.63	910	940	970	±5.06	891	940	989	±8.25
100	212	0.61	970	1000	1030	±4.9	950	1000	1050	±8.17
110	230	0.60	1029	1062	1096	±5.31	1007	1062	1117	±8.66
120	248	0.58	1089	1127	1164	±5.73	1067	1127	1187	±9.17
130	266	0.57	1152	1194	1235	±6.17	1128	1194	1259	±9.69
140	284	0.55	1216	1262	1309	±6.63	1191	1262	1334	±10.24
150	302	0.54	1282	1334	1385	±7.1	1256	1334	1412	±10.8
160	320	0.53	1350	1407	1463	±7.59	1322	1407	1492	±11.37
170	338	0.52	1420	1482	1544	±8.1	1391	1482	1574	±11.96
180	356	0.51	1492	1560	1628	±8.62	1461	1560	1659	±12.58
190	374	0.49	1566	1640	1714	±9.15	1533	1640	1747	±13.2
200	392	0.48	1641	1722	1803	±9.71	1607	1722	1837	±13.85
210	410	0.47	1719	1807	1894	±10.28	1683	1807	1931	±14.51
220	428	0.46	1798	1893	1988	±10.87	1760	1893	2026	±15.19
230	446	0.45	1879	1982	2085	±11.47	1839	1982	2125	±15.88
240	464	0.44	1962	2073	2184	±12.09	1920	2073	2226	±16.59

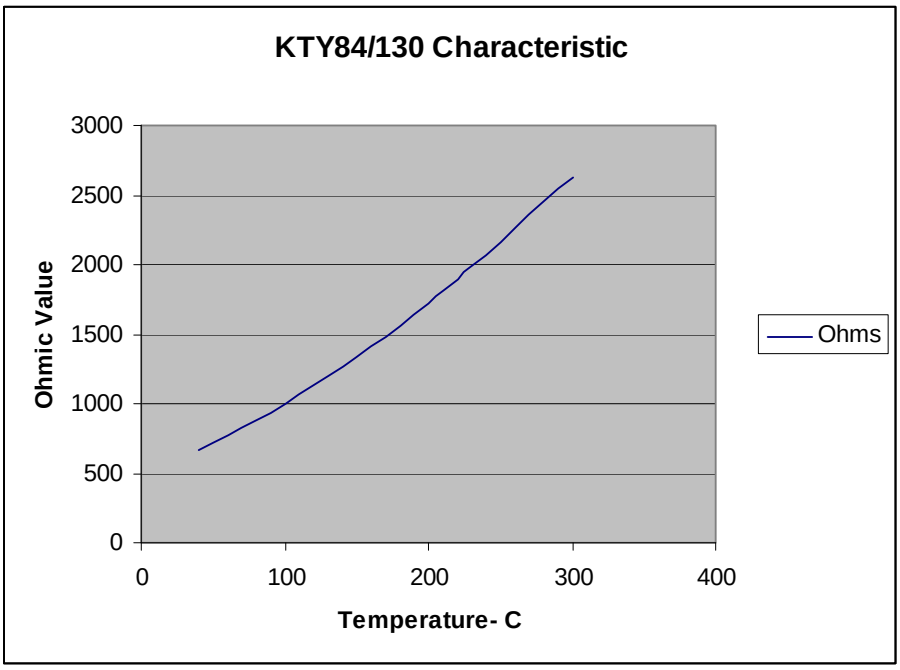

As can be seen from the KTY84 data sheet that its ohmic value is outside the range of the standard setup for the Unidrive SP (trip point at 3400 ohms and resetting at 1875 ohms. It should also be seen from the plot of the KTY84/130, this thermistor plot is rather common of most thermistors. This particular plot shows a PTC (positive temperature characteristic) curve and is fairly linear from 200-300 degrees at least.

It turns out that one of the modes for Analog input #3 is th.d .SP (set by #0.21 or #7.15) . This mode causes a thermistor readout in #7.03 which is a percentage of 10K ohms (but no trip action). For the KTY84, I created a table of Motor Temperature, Thermistor Value (from typical column) and the reading of #7.03. From this one could create their own Motor Temperature Warning and Trip point for Overtemperature.

For instance, let's say we wish to create a Warning Alarm at 110°C but trip the drive at 140°C.

Celcius	Fahrenheit	Ohmic Value	#7.03
40	104	672	6.2
50	122	722	6.7
60	140	773	7.3
70	158	826	7.8
80	176	882	8.4
90	194	940	8.7
100	212	1000	9.3
110	230	1062	9.9
120	248	1127	10.6
130	266	1194	11.2
140	284	1262	11.9
150	302	1334	12.5
160	320	1407	13.2
170	338	1482	14.3
180	356	1560	15
190	374	1640	15.7
200	392	1722	16.5
210	410	1807	17.2
220	428	1893	18
230	446	1982	18.8
240	464	2073	19.6
250	482	2166	20.5
260	500	2261	21.8
270	518	2357	22.7
280	536	2452	23.6
290	554	2542	24.5
300	572	2624	25.4

Warning Temp

Trip Temp

Warning Value

Trip Value

Determined experimentally using a resistance decade box

Implementation

Custom Motor Overtemperature Detection

To create an overtemperature trip with this thermistor we can use one of the built-in Comparators from Menu 12. We may also want to create an Overtemperature warning prior to the Overtemperature Trip when the motor temperature exceeds another lower trip point.

So we want to create a Motor Temp trip at say 140°C (284°F). By looking at the previous table, the center or typical value for the KTY84/130 thermistor would be about 1262 ohms which would create a reading of 11.9% at #7.03. Therefore, we would set the comparator threshold at this level with a small amount of hysteresis.

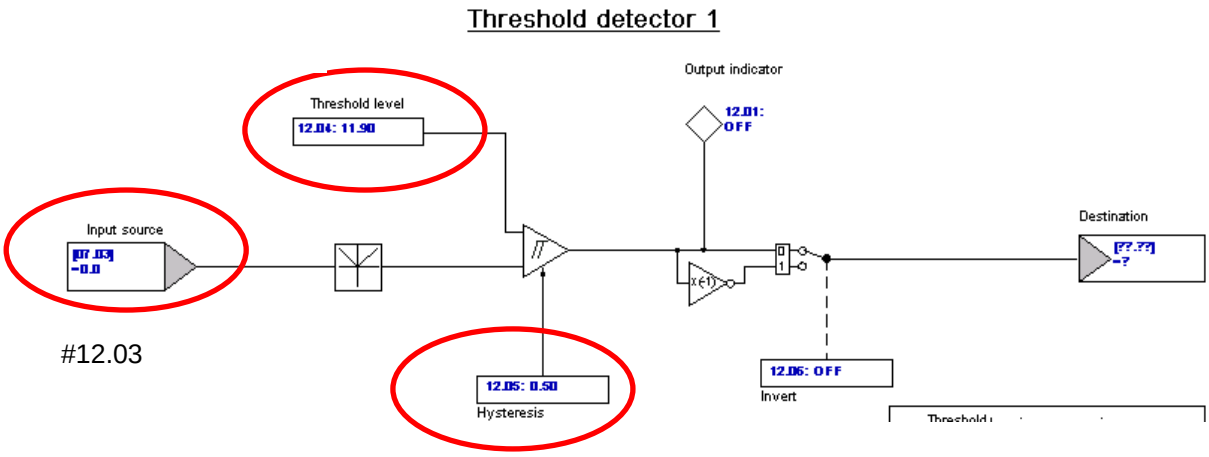

Parameter #12.01 will then become our Motor OverTemperature trip bit.

If the application were such that the motor was being used in a rather short duration move, it may be desirable to let the drive continue with the move but then deny further moves until the motor has cooled below the Hot Motor Threshold amount. For this kind of implementation, one may simply want to monitor #12.01 for this purpose and perform the STOP after move logic elsewhere- (SyPT Lite would be ideal perhaps)

However, in our case, we may want to simply trip the drive. It would nice if we could not only trip the drive but somehow annunciate that particular fault. It turns out that the normal drive trip for a Thermistor overtemperature would annunciate th on the drive display. The th trip code is numerically a 24. If we could send a 24 to the User Trip register (#10.38) we could achieve what we are looking for.

These screen shots were taken from the drive configuration software- CTSoft

Click here to down free **CTSoft**

Creating and Annunciating a th Trip

We can achieve this through use of the Variable Selectors of menu 12.

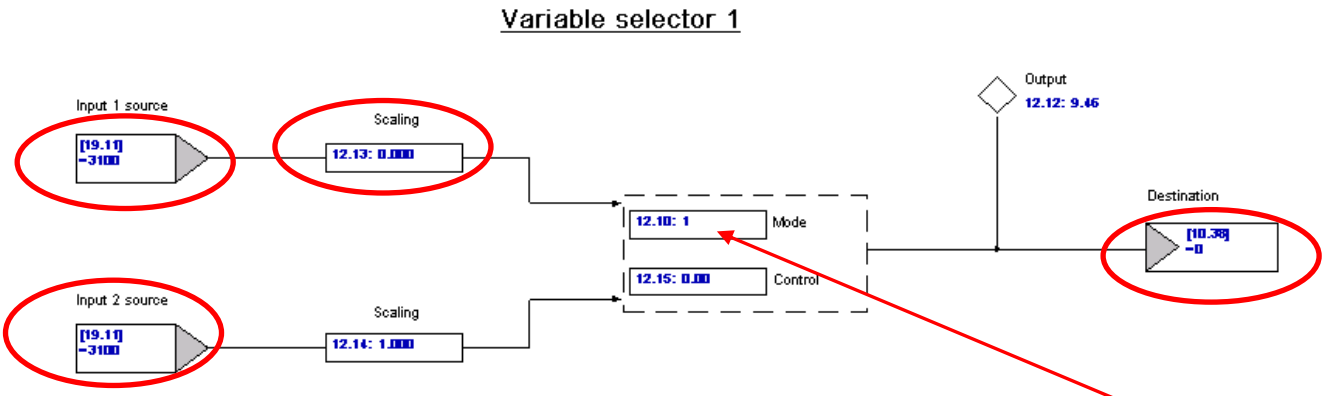

I decided to refer to an internal free parameter #19.11 to hold a value that I could scale to eventually become 24 at #10.38. The User Trip parameter, #10.38 can be a maximum of 255 therefore 24/255= 0.094. Parameter #19.11 can be 32768. The number we need to place into #19.11 must be 0.094 x 32768 or 3084, but I'll round up to 3100.

What we will do is have the Threshold detector write to #12.10 which will normally be 0 when the motor temperature is ok, but when the temperature is exceeded, it will switch to a 1 which will cause the Variable selector to write its' value of 24 to the User Trip parameter #10.38. This will trip the drive and annunciate th.

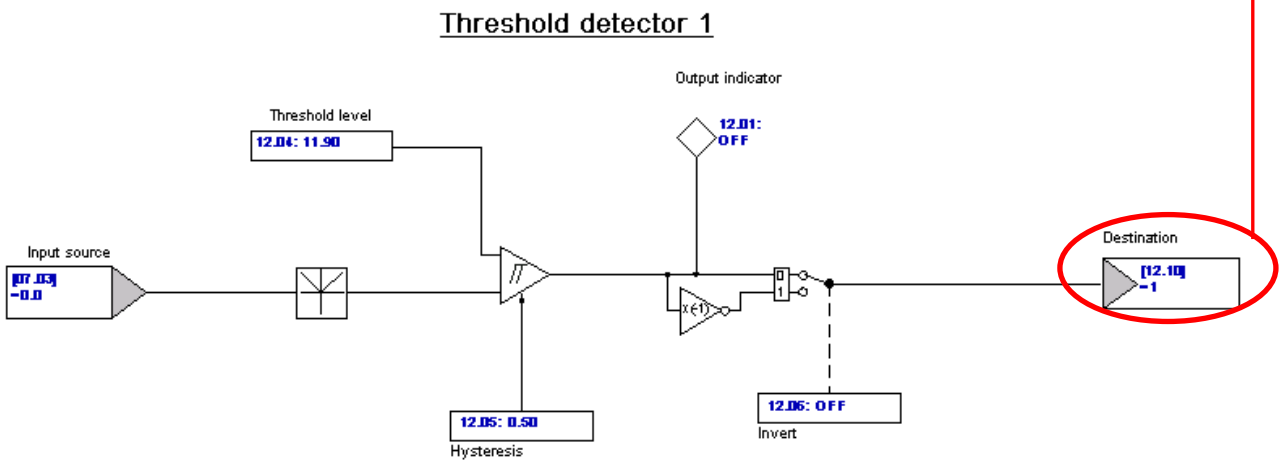

Don't Forget to Reset in order for these assignments to take effect !!!!

Optional Overtemperature Warning

If you wish to have an Overtemperature early warning, use of the 2nd Threshold detector set at the 110°C or 9.9 on the threshold will do the trick. One can then pick up the fact that the motor is reaching a high temperature by routing a #12.02 to a digital output or relay.

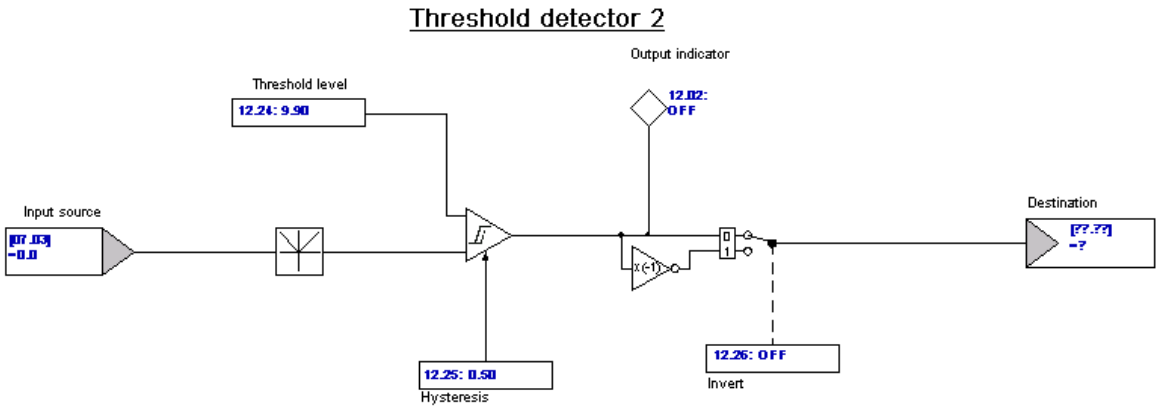

As an embellishment to the Warning bit, you may want a Flashing Overtemperature Warning light. Refer to **CTAN201** if you would like see how to implement this embellishment.

Summary

So basically, the Unidrive SP, Commander GP20 and Affinity series drives have the ability to handle a variety of motor thermistors and create a warning as well as high temperature trip points.

If one can obtain the data sheet for the particular thermistor and pick out the typical expected resistance at the temperature of interest, one could make up variable resistor using a series resistor and a pot wired as a rheostat and simply set the desired value using an ohmmeter. For the KTY84 series you would probably want to use a 680ohm fixed resistor in series with a 1K potentiometer. This would give you a span of 40-190°C. You would need to set #0.21(or #7.15) = th.d .SP. Then you would simply place this calibrated resistance between terminal 8 and 11 and record the value displayed by #7.03. This would be used for your trip threshold level setting you would place into #12.04 as shown on page 5.

To term 8

To term 11

Fixed Resistor

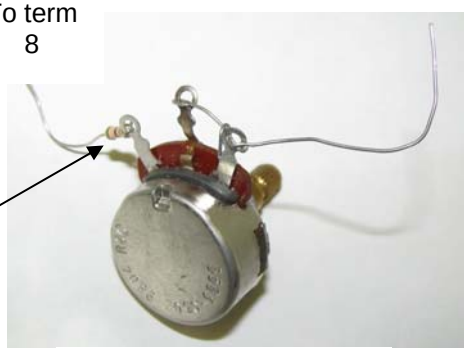

Pot wired as rheostat adjusted for trip ohms

<u>Example 2</u> Dealing with an NTC Thermistor

Suppose we had a motor outfitted with a Thermistor that exhibited a NTC (negative temperature characteristic) with the following specifications:

NTC - Thermistor für Moog G400 Serie Motoren

Teile Nummern:
Moog Teile Nr. A 94225-001
Hersteller: Valvo Typ 2322 633 73224

Temperatur °C	R min kOhm	R typ kOhm	R max kOhm
25	209.000	220.000	231.000
30	169.430	179.500	189.570
40	113.100	121.300	129.548
50	77.291	83.630	90.270
60	53.497	58.710	64.017
70	37.795	41.920	46.154
80	27.141	30.410	33.792
90	19.782	22.390	25.099
100	14.645	16.720	18.895
110	10.959	12.630	14.392
120	8.315	9.663	11.096
130	6.383	7.478	8.651
140	4.954	5.850	6.815
150	3.888	4.625	5.424
160	3.081	3.691	4.358
170	2.463	2.973	3.532
180	1.988	2.415	2.886
190	1.618	1.978	2.377
200	1.327	1.632	1.973
210	1.095	1.355	1.646
220	0.910	1.132	1.383
230	0.761	0.952	1.168
240	0.641	0.806	0.994
250	0.543	0.686	0.850
260	0.461	0.587	0.731
270	0.396	0.506	0.632
280	0.341	0.437	0.548
290	0.295	0.380	0.479
300	0.257	0.332	0.420

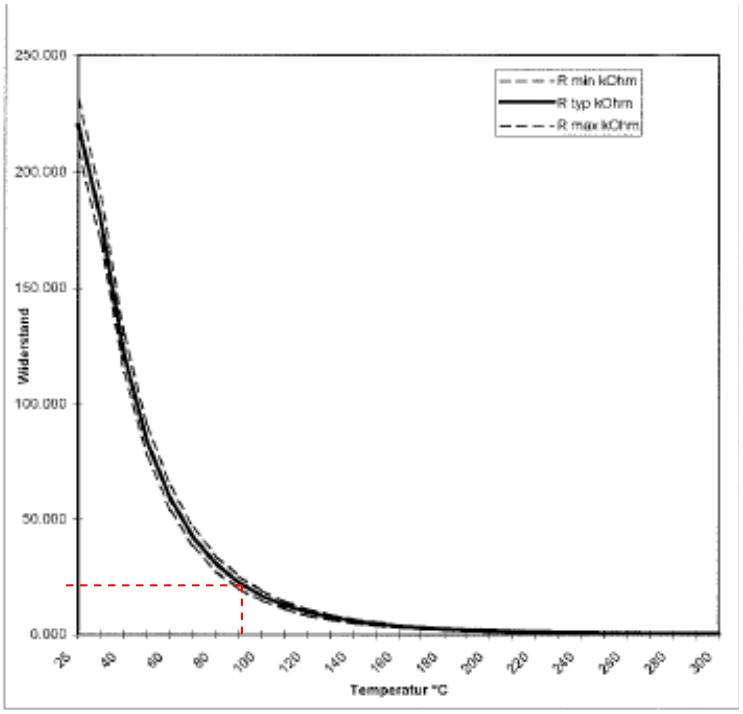

First of all- right off the bat, we see that the characteristic plot of the this thermistor exhibits a negative temperature coefficient meaning it is an NTC type-(plus this one is not very linear with temperature). The Unidrive SP is setup to handle PTC characteristics (ie resistance increase with temperature).

We should be able to deal with this, however it will take some special handling. First we need to decide at what temperature we wish to trip the drive due to motor overtemperature. Let's say we wish to shut down the drive at 100°C (212°F boiling temp of water). From the data sheet, we see the center value for that temperature is around 16K. Unfortunately this is outside the range stated on page 2 – greater than 5K. So we will not be able to use the th.d .SP mode. So we'll have to come up with a different scheme.

Example 2 con't

If we were to construct a simple external resistor voltage divider consisting of say a 10K resistor below this thermistor being excited with our +10v supply, perhaps we could sense the voltage difference from cold to hot ???

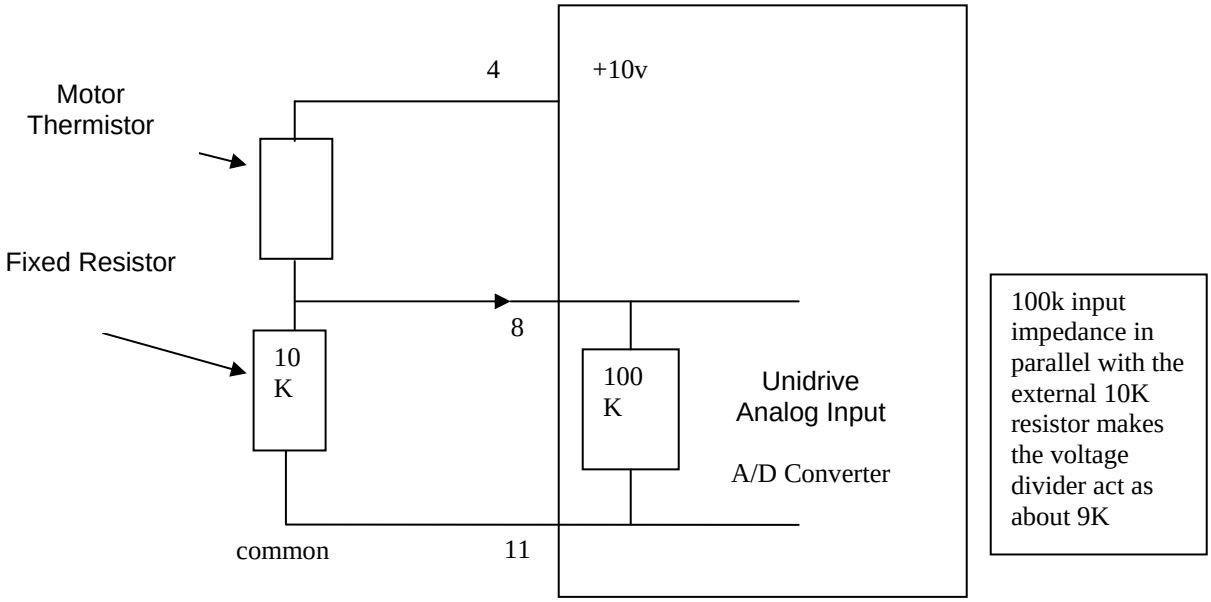

If we applied Kirchoff laws to this simple series circuit, we can see that the voltage at the junction of the thermistor and the fixed 10K resistor ranges only from :

Cool Temp 25°C (220K) = 10v/ 229K * 9K = 0.39 v

(14.6K) = 10v/ (14.6K+ 9K) * 9K = 3.8 v
Hot Motor 100°C (16.7K) = 10v/ (16.7K+ 9K) * 9K = 3.5 v ←
(18.9K) = 10v/ (18.9K+ 9K) * 9K = 3.22 v

The difference then from cold to hot would span approximately 3 volts which is a reasonable span which should allow us to determine when the thermistor is hot. I say approximately because – well, look at the thermistor data. For any given temperature the device has a minimum to a maximum resistance which for 100°C can be 14.6K to 18.9K with a center value of 16.7K which is about a+/-15% variance or so.

Example 2 con't

In general however, using this scheme, the voltage divider method, as the temperature rises, so does the voltage which tends to invert the logic of the NTC.
If we set up the mode for Analog Input #3 to a pure voltage mode- (you would need to set #0.21(or #7.15) = Volt), we can create a threshold value for this voltage and apply the same methods used in example 1.

So with 3.5volts appearing at terminal 8, #7.03 we would set the Comparator Level (#12.04) for 35% - see page 5. From there on out the implementation would be the same as Example 1.

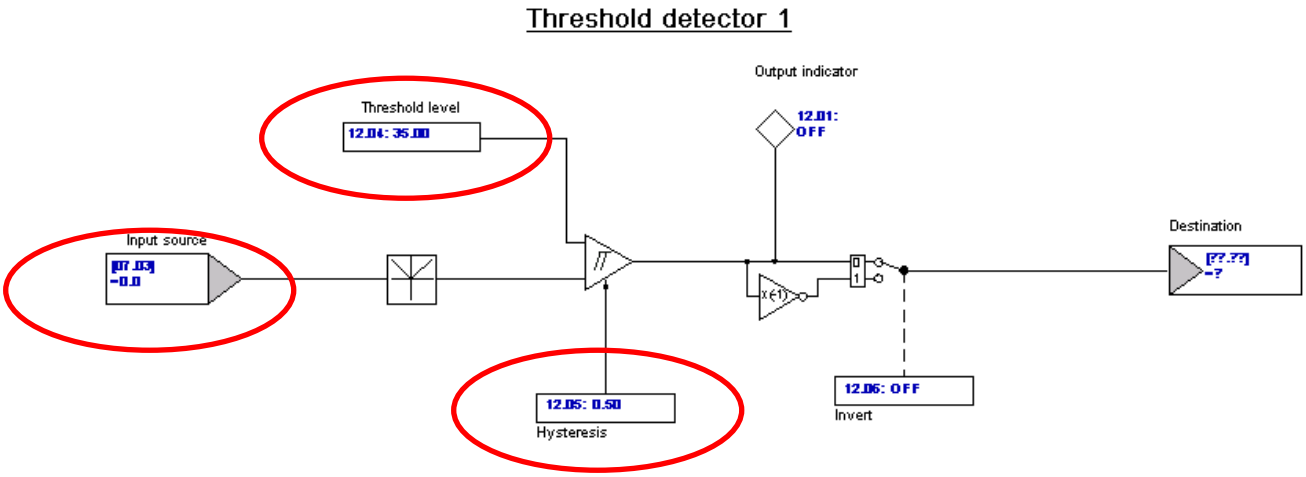

Early Overtemperature Warning

If you wanted the early temperature warning and to have it kick in at say 80°C again you would use the other Comparator for this purpose (See pg 7). This temperature corresponds to a thermistor value of around 30K which would yield:

Warning 80°C (30K) = 10v/ (30K+ 9K) * 9K = 2.3 v which would correspond to 23% in the second Comparator. The remainder would be the same as discussed on page 7 for example 1.

Questions ?? Ask the Author:

Author: **Ray McGranor** **email:** mailto:ray.mcgranor@emerson.com
(716)-774-1193 x121